International Planetary Observation Processing Package (IPOPP) User's Guide

Version 4.0

May 2020

GODDARD SPACE FLIGHT CENTER
GREENBELT, MARYLAND

Table of Contents

1. General 1
2. Purpose 1
3. Software Version 1
4. IPOPP Overview 2
5. IPOPP Installation 2
6. IPOPP Operation 3
7. Archive Reprocessing 11
Appendix A. System Requirements A-1
Appendix B. IPOPP Dashboard B-1
Appendix C. Science Processing Algorithms and Products C-1
Appendix D. Location of Ancillaries and Data Products D-1
Appendix E. Installing/Updating/Configuring SPAs E-1
Appendix F. IPOPP Monitoring F-1
Appendix G. Pass Manager G-1
Appendix H. Diagnosing and Recovering from IPOPP Operational Errors H-1
Appendix I. Running IPOPP Without an Internet Connection I-1
Appendix J. IPOPP Command Line Operation J-1
Appendix K. IPOPP Directory Structure K-1
Appendix L. Parallel Processing L-1

1. General

The International Planetary Observation Processing Package (IPOPP) processes science data and derivative products from the NOAA-20 [Joint Polar Satellite System (JPSS-1)], Suomi National Polar-orbiting Partnership (SNPP), Aqua, and Terra missions. IPOPP was initially designed for real-time science data processing but has evolved into a more general data processing package equally suited for both real-time and non-real-time science data processing. IPOPP's real-time data processing capability maximizes the utility of Earth science data for real-time applications and decision-making.

Please direct any comments or questions regarding this software to the Direct Readout Laboratory (DRL) via the "Contact DRL" mechanism at the DRL Web Portal:
https://directreadout.sci.gsfc.nasa.gov/?id=dspContent&cid=66

2. Purpose

This document provides instructions for installing and operating the IPOPP software. IPOPP can ingest JPSS and SNPP Raw Data Record (RDR) files, JPSS and SNPP Visible Infrared Imaging Radiometer Suite (VIIRS) and Ozone Mapping Profiler Suite (OMPS) Production Data Set (PDS) files, and Terra/Aqua PDS files. It automates multi-level processing of the ingested RDR and PDS files and produces JPSS and SNPP Sensor Data Records (SDRs), JPSS and SNPP Environmental Data Records (EDRs), and Terra/Aqua Level-1 and Level-2 products. For a list of science algorithms and associated products included in this package, refer to Appendix C, "Science Processing Algorithms and Products."

IPOPP can process both real-time sensor data (e.g., direct broadcast downlink), and non-real time sensor data (e.g., downloaded from global archives). A Front End System (FES) set up to receive raw sensor data from a direct broadcast downlink can serve as a real-time source of JPSS and SNPP RDR files and/or Terra/Aqua PDS files. The FES is not part of this distribution; however, FES software technologies [e.g., Real-time Software Telemetry Processing System (RT-STPS) and Simulcast], along with IPOPP and Science Processing Algorithms (SPAs), are available at the DRL Web Portal for use by the commercial sector. IPOPP architecture is depicted in Figure 1.

3. Software Version

IPOPP Version 4.0 was developed by the Direct Readout Laboratory (DRL), NASA Goddard Space Flight Center. Version 4.0 includes the following enhancements:

- Support for the processing of NASA data model input files for SNPP and NOAA-20 (JPSS-1) VIIRS and OMPS data.
- The VIIRS-L1 and L1toSDR SPAs are included and enabled by default for VIIRS processing.
- The VFIRE375 SPA, which supports NASA data model VIIRS L1B inputs, is included to enable the creation of a two-dimensional fire mask in Hierarchical Data Format (HDF) and a fire location text file.
- The VIIRS Enhanced Near Constant Contrast (ENCC) SPA is included to enable the creation of Day/Night Band (DNB) ENCC albedo and ENCC Day/Night imagery products.
- The OMPSNADIR SPA has been updated to v2.6.7, with major improvements in stability.

Copyright 1999-2007, United States Government as represented by the Administrator for the National Aeronautics and Space Administration. All Rights Reserved.

4. IPOPP Overview

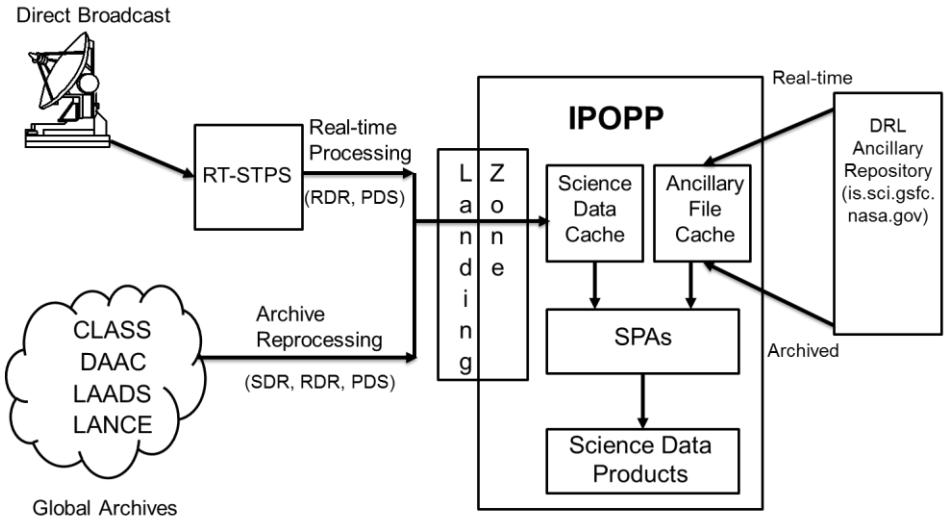

Figure 1. IPOPP Overview

IPOPP is an autonomous multi-mission, multi-sensor data processing framework. The framework provides an environment for running plug-and-play Science Processing Algorithms (SPAs). The user only needs to configure IPOPP and place data in the Landing Zone.

IPOPP supports:

- real-time processing to meet user operational science data requirements;
- archive reprocessing for algorithm evaluation (e.g., multiple versions of an algorithm running in a single processing environment to eliminate ambiguity of measurement).

IPOPP will autonomously:

- discover and register raw sensor data;
- retrieve ancillaries from the DRL's real-time and archived ancillary repositories;
- register ancillaries in its Ancillary File Cache;
- schedule SPA executions;
- fulfill science data/ancillary requests from SPAs;
- generate science data products; and
- manage the IPOPP file system.

5. IPOPP Installation

NOTE: Refer to Appendix A for system requirements.

Step 1: Download the IPOPP software package

a) Users must be registered with the DRL to download IPOPP. New users must complete the "MyDRL Registration Form" at https://directreadout.sci.gsfc.nasa.gov/dspRegister.cfm?id=registration to request an account.

b) Go to: https://directreadout.sci.gsfc.nasa.gov/?id=software and select "IPOPP" from the list of available packages. Enter your registered email address and password and follow the specific download and installation instructions, provided on the Web Portal, to download IPOPP.

Step 2: Install IPOPP

The following steps must be completed by the user that will be running IPOPP, referred to hereafter as the IPOPP user account. The instructions contained in this User's Guide assume that $HOME is the home directory of the IPOPP user account (e.g., /home/ipopp).

NOTES:

1. Installing IPOPP will uninstall any previous installation of IPOPP, which will delete all data products. **Copy data products that you wish to retain to another location before you install or reinstall IPOPP.**
2. IPOPP 4.0 may be configured to use /raid for storage, as in IPOPP prior to v2.5. Refer to Appendix J, "IPOPP Command Line Operation," for details.

a) Log in as the IPOPP user.

b) rm -r $HOME/IPOPP [Delete the $HOME/IPOPP directory, if it exists]

c) tar -C $HOME -xzf DRL-IPOPP_4.0.tar.gz [Untar tar file obtained in Step 1 into $HOME]

Execution takes several minutes and creates $HOME/IPOPP.

d) rm DRL-IPOPP_4.0.tar.gz [Optionally delete the source tar file]

e) chmod -R 755 $HOME/IPOPP [Change $HOME/IPOPP permission]

f) cd $HOME/IPOPP [Change directory]

g) ./install_ipopp.sh [Install IPOPP from $HOME/IPOPP]

Installation takes several minutes. Wait for the message "IPOPP installation complete" to ensure that installation is complete.

h) Log out and log back in [Ensure environment is correct]

The IPOPP installer modifies the IPOPP user account environment, changing its PATH and LD_LIBRARY_PATH. Logging out and back in ensures those changes are available.

You are now ready to start IPOPP processing. Refer to Section 6, "IPOPP Operation."

6. IPOPP Operation

NOTES:

1. All IPOPP operations must be performed by the IPOPP user account.
2. Please note that the location used for ingest has changed since IPOPP v2.4 (for more information regarding the directory structure, refer to Appendix K, "IPOPP Directory Structure"). Use the IPOPP Dashboard and the ingest procedure (Landing Zone) described below in Step 3. The Landing Zone is located at $HOME/drl/data/dsm/ingest. Once RDR files and/or PDS file pairs are placed into $HOME/drl/data/dsm/ingest, run the ingest_ipopp.sh script to ingest them into IPOPP for processing and to automatically ensure that all ancillary data files required to process the sensor data are resident in IPOPP. You may wish to automate the ingest_ipopp.sh script for your real-time processing needs.
3. IPOPP is configured via the IPOPP Dashboard in Configuration Editor Mode. IPOPP operation may be controlled via the Dashboard in Process Monitor Mode, or via the command line. Users wishing to control operation from the command line should refer to Appendix J, "IPOPP Command Line Operation."

Step 1. Configure IPOPP

a) $HOME/drl/tools/dashboard.sh & [Open IPOPP Dashboard]

The IPOPP Dashboard is the user interface for IPOPP operations. The Dashboard has two modes: Configuration Editor Mode (see Figure 2a) and Process Monitor Mode (see Figure 2b). The Dashboard opens in the Process Monitor Mode when first invoked. IPOPP configuration is allowed only in the Configuration Editor Mode. Detailed descriptions of all IPOPP Dashboard components are contained in Appendix B, “IPOPP Dashboard.”

Click “Mode > IPOPP Configuration Editor” [Switch to Configuration Editor Mode]

Confirm the stopping of all SPA services on the dialog box that appears. SPA services will be stopped to enter Configuration Editor Mode. Each square box on the Dashboard (see Figure 2a) represents an SPA service. An SPA service is an IPOPP processing agent responsible for generating a subset of the output products available from the SPA as a whole. An SPA may thus have multiple services. Each SPA service on the Dashboard is labeled; the label includes the SPA name to associate the service to its source SPA. Information on data products available from each SPA service is available by clicking on the Product Information button labeled “i” on the SPA Service. SPA services are distributed in tabs as follows:

- “EOS” - displays SPA services that process data from Terra/Aqua MODIS;
- “SNPP-VIIRS” - displays SPA services that process SNPP VIIRS data;
- “SNPP-ATMS/CrIS/OMPS” tab displays SPA services that process SNPP ATMS, CrIS and OMPS data;
- “JPSS-1-VIIRS” - displays SPA services that process JPSS-1 VIIRS data;
- “JPSS-1-ATMS/CrIS/OMPS” - displays SPA services that process JPSS-1 ATMS, CrIS and OMPS data.
- "GOES-16" – displays SPA services that process Geostationary Operational Environmental Satellite-16 (GOES-16) Advanced Baseline Imager (ABI) full-disk mode 3 data;
- "GOES-17" – displays SPA services that process GOES-17 ABI full-disk mode 3 data;
- "LANDSAT-8" – displays SPA services that process LANDSAT-8 OLI data;
- "SENTINEL-2A" – displays SPA services that process SENTINEL-2A MSI data; and
- "SENTINEL-2B" – displays SPA services that process SENTINEL-2B MSI data.

The GOES-16, GOES-17, LANDSAT-8, SENTINEL-2A, and SENTINEL-2B tabs are reserved for future SPA services.

The Dashboard configuration is updated automatically during installation of a new SPA or software patch as described in Appendix E, “Installing/Updating/Configuring SPAs.” The Dashboard configuration is also updated automatically by running the script retrieve_cumulative_ancillaries.sh as described in Appendix I, “Running IPOPP Without an Internet Connection.”

Figure 2a. IPOPP Dashboard in Configuration Editor Mode

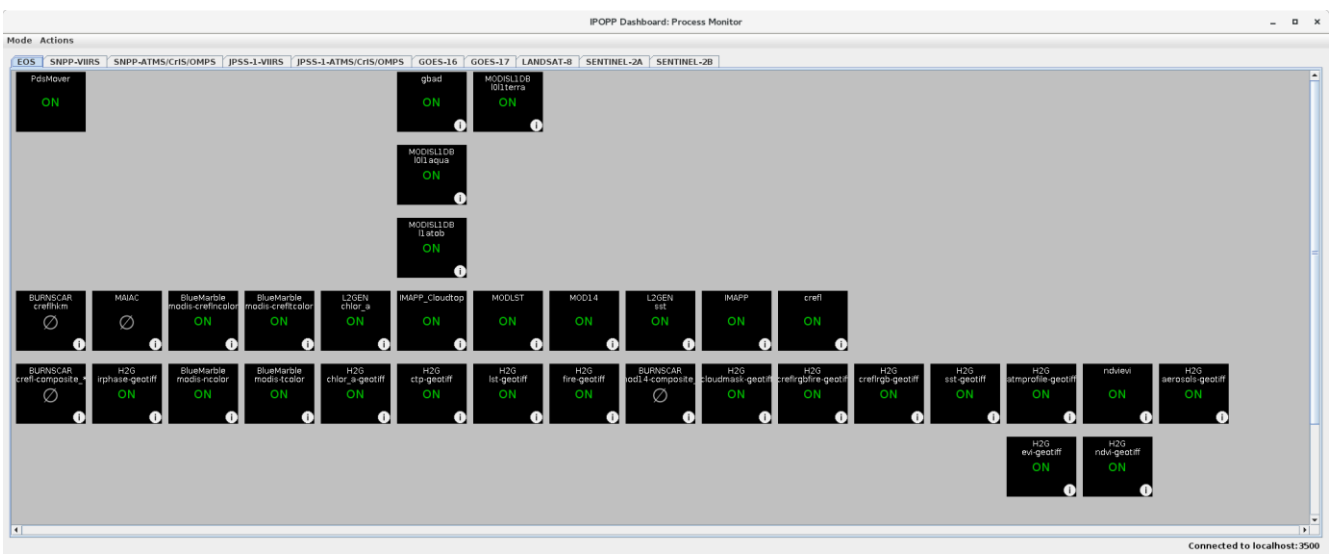

Figure 2b. IPOPP Dashboard in Process Monitor Mode

b) Select projection for IPOPP imagery [Configure H2G_SPA]

H2G_SPA is configured for geographic projection by default. Click “Actions>Configure Projection” to switch between stereographic and geographic projections.

c) Enable/Disable SPA Services [Edit IPOPP Configuration]

Each SPA on the Dashboard acts as a toggle button to allow users to enable or disable it. As you mouse over each SPA Service, the immediate upstream and downstream SPA services are highlighted.

Note that the immediate upstream SPA services may depend on their own upstream SPA services, which in turn can have their own prerequisites. In order to correctly enable an SPA service, you will need to follow the dependencies all the way up the processing chain and enable all predecessor SPA services. Refer to Appendix C, "Science Processing Algorithms and Products," for a list of the SPAs included in this software package and their associated products. Refer to Appendix E, "Installing/Updating/Configuring SPAs" for instructions to install, update or configure new SPAs.

NOTES:

1. On the JPSS-1-VIIRS and SNPP-VIIRS tabs of the Dashboard, all of the outputs corresponding to SPA services may be created by:
   - enabling the VIIRS-L1 SPA service, and ingesting VIIRS PDS files; or
   - enabling the VIIRS_C-SDR SPA service, and ingesting VIIRS RDR files.

   SPA services that process VIIRS data will show both VIIRS_C-SDR and VIIRS-L1 as upstream dependencies; in this case enabling only one of them is sufficient. By default, VIIRS-L1 and L1toSDR are enabled to support the NASA data model, so IPOPP will process VIIRS PDS files.

   IMPORTANT: Do not enable VIIRS-L1 and VIIRS_C-SDR services simultaneously.

2. Be mindful of the number of enabled SPA services, as this impacts system load.

Step 2: Start IPOPP Services

a) Click "Mode> IPOPP Process Monitor" [Switch to Process Monitor Mode]

Click 'Yes' to save the Configuration just edited, and press 'OK' on the "IPOPP configuration saved" prompt. The display will be synchronized before entering the Process Monitor Mode. IPOPP utilities including the one that starts IPOPP services are only available in the Process Monitor Mode. At this point all SPA services (including the ones that were enabled in Step 1) should report their status as "OFF".

b) Click "Actions> Start Services" [Start IPOPP Services]

Confirm starting of IPOPP services. A progress bar dialog box shows progress until all services are started. All SPA services enabled in Step 1 should now appear as "ON" on the Dashboard Window. IPOPP Services include SPA services, Ancillary Retrieval and Registration Services, Ingest Services, File Management Services, Logging Services, and Database Maintenance Services.

Step 3: Ingest Data

a) Click "Actions>Check IPOPP Services" [Ensure all IPOPP services are running]

Ensure that IPOPP Services are available when the Dashboard is in Process Monitor mode. A dialog box will report IPOPP status. If some services are reported as not running, use the Actions>Start Services option to start all services. If the utility reports an error, refer to Appendix B, "IPOPP Dashboard," for more details.

b) Place input data files into the Landing Zone at $HOME/drl/data/dsm/ingest [Prepare for ingest]

IMPORTANT:

1. **Please wait until the transfer of files into $HOME/drl/data/dsm/ingest is complete before proceeding to the next step**.

2. **Input data files must have mission-compliant file names** (as shown in Tables 1a and 1b) in order to be registered correctly and processed by IPOPP. The CRECBuilder

package can be used to rename nonconforming Aqua/Terra packet files and generate CSRs from packet files where CSRs are unavailable. The CRECBuilder software package is available at: https://directreadout.sci.gsfc.nasa.gov/?id=software

3. Some types of IPOPP ingest require sets of related files. The ingest_ipopp.sh script (refer to Step 3c) looks for these sets and only ingests complete sets. The number and types of files that make up a set can be determined from Tables 1a and 1b by looking at the Level 0 SPA services that must be enabled to process them.

   For example, if you want to process SNPP VIIRS PDS files, you must present sets of PDS files named as follows:

   SNPP S/C data files:
   - P1570000….0.PDS
   - P1570000….1.PDS
   - P1570008….0.PDS
   - P1570008….1.PDS
   - P1570011….0.PDS
   - P1570011….1.PDS

   SNPP VIIRS data files:
   - P1570826….0.PDS
   - P1570826….1.PDS

   If you want to process SNPP OMPS PDS files, you must present sets of PDS files named as follows:

   SNPP S/C data files:
   - P1570000….0.PDS
   - P1570000….1.PDS
   - P1570008….0.PDS
   - P1570008….1.PDS
   - P1570011….0.PDS
   - P1570011….1.PDS

   SNPP OMPS data files:
   - P1570560….0.PDS
   - P1570560….1.PDS
   - P1570561….0.PDS
   - P1570561….1.PDS

   If you want to process JPSS VIIRS PDS files, you must you must present sets of PDS files named as follows:

   JPSS S/C data files:
   - P1590000….0.PDS
   - P1590000….1.PDS
   - P1590008….0.PDS
   - P1590008….1.PDS
   - P1590011….0.PDS
   - P1590011….1.PDS

JPSS VIIRS data files:

- P1590826….0.PDS
- P1590826….1.PDS

If you want to process JPSS OMPS PDS files, you must present sets of PDS files named as follows:

JPSS S/C data files:

- P1590000….0.PDS
- P1590000….1.PDS
- P1590008….0.PDS
- P1570008….1.PDS
- P1590011….0.PDS
- P1590011….1.PDS

JPSS OMPS data files:

- P1590616….0.PDS
- P1590616….1.PDS
- P1590617….0.PDS
- P1590617….1.PDS

Table 1a: SNPP/JPSS RDR Files, Naming Conventions and Level 0 SPA Services Required for IPOPP Ingest

Sensor	RDR Files Required for IPOPP Ingest	Required Naming Convention	Level 0 SPA Service to be Enabled on IPOPP Dashboard
VIIRS	VIIRS RDR	`RNSCA-RVIRS_xxx_dYYYYMMdd_thhmmssS_ehhmmssS_bnnnnn_cnnnnnnnnnnnnnnnnnnn_aaaa_aaa.h5`	VIIRS_C-SDR
ATMS	ATMS RDR	`RATMS-RNSCA_xxx_dYYYYMMdd_thhmmssS_ehhmmssS_bnnnnn_cnnnnnnnnnnnnnnnnnnn_aaaa_aaa.h5`	ATMS_C-SDR
CrIS	CRIS RDR	`RCRIS-RNSCA_xxx_dYYYYMMdd_thhmmssS_ehhmmssS_bnnnnn_cnnnnnnnnnnnnnnnnnnn_aaaa_aaa.h5`	CRIS_C-SDR

NOTE: 'xxx' represents the satellite. Legal values are 'npp' for SNPP and 'j01' for JPSS-1. 'YYYYMMdd' represents the date of the start of the swath (YYYY: 4 digit year; MM: month; dd: day of month). The first and the second 'hhmmssS' represent the start and end of swath, respectively (hh: hour; mm: minutes; ss: seconds; S: 10th of a second). The n's represent numbers, and the a's represent alphabetic characters including '-'.

Table 1b: Terra/Aqua/SNPP/JPSS PDS File Pair Naming Conventions and Level 0 SPA Services Required for IPOPP Ingest

Sensor	PDS File Pairs Required for IPOPP Ingest	Required Naming Convention	Level 0 SPA Service to be Enabled on IPOPP Dashboard
Terra MODIS	Terra MODIS packet file Terra MODIS CSR file	P0420064AAAAAAAAAAAAAAyyDDDhhmmss001.PDS P0420064AAAAAAAAAAAAAAyyDDDhhmmss000.PDS	l0l1terra
Aqua MODIS	GBAD Packet file GBAD CSR file Aqua MODIS Packet file Aqua MODIS CSR file	P1540957AAAAAAAAAAAAAAyyDDDhhmmss001.PDS P1540957AAAAAAAAAAAAAAyyDDDhhmmss000.PDS P1540064AAAAAAAAAAAAAAyyDDDhhmmss001.PDS P1540064AAAAAAAAAAAAAAyyDDDhhmmss000.PDS	gbad l0l1aqua
SNPP S/C	Spacecraft Packet file Spacecraft CSR file Spacecraft Packet file Spacecraft CSR file Spacecraft Packet file Spacecraft CSR file	P1570000AAAAAAAAAAAAAAyyDDDhhmmss001.PDS P1570000AAAAAAAAAAAAAAyyDDDhhmmss000.PDS P1570008AAAAAAAAAAAAAAyyDDDhhmmss001.PDS P1570008AAAAAAAAAAAAAAyyDDDhhmmss000.PDS P1570011AAAAAAAAAAAAAAyyDDDhhmmss001.PDS P1570011AAAAAAAAAAAAAAyyDDDhhmmss000.PDS	VIIRS-L1 (00, 08, 11) OMPSnadir (08, 11)
JPSS S/C	Spacecraft Packet file Spacecraft CSR file Spacecraft Packet file Spacecraft CSR file Spacecraft Packet file Spacecraft CSR file	P1590000AAAAAAAAAAAAAAyyDDDhhmmss001.PDS P1590000AAAAAAAAAAAAAAyyDDDhhmmss000.PDS P1590008AAAAAAAAAAAAAAyyDDDhhmmss001.PDS P1590008AAAAAAAAAAAAAAyyDDDhhmmss000.PDS P1590011AAAAAAAAAAAAAAyyDDDhhmmss001.PDS P1590011AAAAAAAAAAAAAAyyDDDhhmmss000.PDS	VIIRS-L1 (00, 08, 11) No JPSS OMPS yet (08, 11)
SNPP VIIRS	VIIRS Packet file VIIRS CSR file	P1570826VIIRSSCIENCEAAyyDDDhhmmss001.PDS P1570826VIIRSSCIENCEAAyyDDDhhmmss000.PDS	VIIRS-L1
JPSS VIIRS	VIIRS Packet file VIIRS CSR file	P1590826VIIRSSCIENCEAAyyDDDhhmmss001.PDS P1590826VIIRSSCIENCEAAyyDDDhhmmss000.PDS	VIIRS-L1
SNPP OMPS	OMPS Packet file OMPS CSR file OMPS Packet file OMPS CSR file	P1570560AAAAAAAAAAAAAAyyDDDhhmmss001.PDS P1570560AAAAAAAAAAAAAAyyDDDhhmmss000.PDS P1570561AAAAAAAAAAAAAAyyDDDhhmmss001.PDS P1570561AAAAAAAAAAAAAAyyDDDhhmmss000.PDS	OMPSnadir (560, 561)
JPSS OMPS	OMPS Packet file OMPS CSR file OMPS Packet file OMPS CSR file	P1590616AAAAAAAAAAAAAAyyDDDhhmmss001.PDS P1590616AAAAAAAAAAAAAAyyDDDhhmmss000.PDS P1590617AAAAAAAAAAAAAAyyDDDhhmmss001.PDS P1590617AAAAAAAAAAAAAAyyDDDhhmmss000.PDS	No JPSS OMPS yet (616, 617)

NOTES:

1. 'yyDDDhhmmss' represents the date/time of the start of the swath (yy: 2-digit year; DDD: Julian day; hh: hour; mm: minutes; ss: seconds).

2. SNPP/JPSS RDR and Terra/Aqua/SNPP/JPSS PDS test data are available at the following locations:
   SNPP VIIRS RDR: ftp://is.sci.gsfc.nasa.gov/gsfcdata/npp/viirs/level0/
   JPSS VIIRS RDR: ftp://is.sci.gsfc.nasa.gov/gsfcdata/jpss1/viirs/level0/
   SNPP ATMS: ftp://is.sci.gsfc.nasa.gov/gsfcdata/npp/atms/level0/
   JPSS ATMS: ftp://is.sci.gsfc.nasa.gov/gsfcdata/jpss1/atms/level0/
   SNPP CrIS: ftp://is.sci.gsfc.nasa.gov/gsfcdata/npp/cris/level0/
   JPSS1 CrIS: ftp://is.sci.gsfc.nasa.gov/gsfcdata/jpss1/cris/level0/

Terra MODIS: ftp://is.sci.gsfc.nasa.gov/gsfcdata/terra/modis/level0/
Aqua MODIS: ftp://is.sci.gsfc.nasa.gov/gsfcdata/aqua/modis/level0/
Aqua GBAD: ftp://is.sci.gsfc.nasa.gov/gsfcdata/aqua/gbad/
SNPP S/C PDS: ftp://is.sci.gsfc.nasa.gov/gsfcdata/npp/spacecraft/level0/
JPSS S/C PDS: ftp://is.sci.gsfc.nasa.gov/gsfcdata/jpss1/spacecraft/level0/
SNPP VIIRS PDS: ftp://is.sci.gsfc.nasa.gov/gsfcdata/npp/viirs/level0/
JPSS VIIRS PDS: ftp://is.sci.gsfc.nasa.gov/gsfcdata/jpss1/viirs/level0/
SNPP OMPS PDS: ftp://is.sci.gsfc.nasa.gov/gsfcdata/npp/omps/level0/
JPSS OMPS PDS: ftp://is.sci.gsfc.nasa.gov/gsfcdata/jpss1/omps/level0/

FTP to is.sci.gsfc.nasa.gov must be done with clients that can do FTPS explicit mode. Linux clients that work include:

- curl (ssl from the command line); and
- FileZilla for a GUI client.

c) $HOME/drl/tools/ingest_ipopp.sh [Ingest data]

The ingest_ipopp.sh tool ingests sensor data files into IPOPP for processing and ensures that all ancillary data files required to process the sensor data are resident in IPOPP. You may wish to automate the ingest_ipopp.sh script for your real-time processing needs.

NOTE: Users who must run IPOPP without an Internet connection, refer to Appendix I, "Running IPOPP Without an Internet Connection."

Step 4: Autonomous IPOPP Processing

As long as IPOPP services are running, IPOPP will autonomously discover ingested raw sensor data, retrieve current ancillaries from external ancillary repositories, register data/ancillaries in its database, manage resource requests from running SPAs, schedule SPA executions, produce and register outputs, and manage the IPOPP file system.

Users can monitor IPOPP activity with the Dashboard in Process Monitor Mode to confirm that enabled SPA services are processing, as well as to view the elapsed time since processing started for each service. Detailed monitoring of IPOPP processing is available via targeted queries to the System Event/Logging System (SLS) database. Refer to Appendix F, "IPOPP Monitoring."

NOTE: IPOPP autonomously manages its file system. User deletion of files from the IPOPP file system is not necessary or recommended. In the event that files are deleted from the file system, synchronize the database to the file system:

$HOME/drl/tools/sync_ipopp.sh

before continuing processing.

NOTE: In the event of unexpected behavior, refer to Appendix H, "Diagnosing and Recovering from IPOPP Operational Errors," and Appendix F, "IPOPP Monitoring."

Step 5: Stop IPOPP Services

As long as you are ingesting and processing data, there is no need to stop IPOPP services. However, IPOPP services can be stopped from the IPOPP Dashboard in its Process Monitor Mode:

Click "Actions>Stop Services" [Stop IPOPP Services]
Confirm stopping of IPOPP services. A progress bar dialog box shows progress until all services are stopped. Return to Step 1 to restart IPOPP processing.

NOTE: Use "Action>Check IPOPP Services" to determine if services are running (services will be stopped if restoring system health; installing/updating/configuring an SPA; resetting IPOPP; and enabling/disabling an SPA).

7. Archive Reprocessing

Archive reprocessing is for algorithm evaluation (e.g., multiple versions of an algorithm running in a single processing environment to eliminate ambiguity of measurement). Archive Reprocessing allows users to download non-real time sensor data from global archives (such as CLASS, DAAC, LAADS, etc.) and ingest them into IPOPP for processing. The difference between real-time processing and archive reprocessing is transparent to the user from an IPOPP operation perspective. IPOPP's ingest system will automatically identify reprocessing sensor data and retrieve the required ancillaries from the DRL's Archived Ancillary repository. Please follow the steps described in Section 6, "IPOPP Operation."

Appendix A
System Requirements

Hardware

IPOPP has been tested on computers with the following configuration:

Processors:	Dual 8-core AMD Opteron 6320 processors
RAM:	64 GB DDR3 buffered ECC
Operating System Disk:	SATA III RAID-1 (2 TB)
Data Disk:	SATA III RAID-10 (4 TB), mounted at /raid
Motherboard:	ASUS KGPE-D16 dual socket G34

It is possible that there may be performance benefits from placing IPOPP's data storage on a separate physical disk and raid controller from the operating system; use the –datadir option in the installer to do this. Be mindful of the number of enabled SPA services, as this impacts system load. JPSS and SNPP processing is CPU-intensive; processors with higher clock speeds will produce output proportionally faster.

Operating System

IPOPP has been tested on a 64-bit computer with a CentOS Linux 7 x86_64 operating system.

System Time

Some IPOPP ancillary file retrievals and product generations are time-dependent; the system must use 24-hour UTC time and be synchronized through a Network Time Protocol (NTP) Server.

Ancillary and Configuration File Retrieval

IPOPP communicates with the DRL server is.sci.gsfc.nasa.gov to retrieve up-to-date ancillary data and configuration files. All transfers are done with FTPS explicit mode. The server listens on port 21 for control connections and ports 60000-62000 for data connections.

Required Software

The following software must be installed:

a) bash 4.1.2 or later;

b) tcsh 6.17 or later;

c) bc 1.06 or later;

d) ed 1.1 or later;

e) full 32-bit support;

f) curl v7.29.0 or later;

g) rsync;

h) gawk;

i) Perl 5.12.4 or later, including the Perl Data Dumper.

Known Issues and Resolutions

NOTE: These procedures must be performed as the root user.

a) System Process Settings: In rare cases, processes may fail to start if the restriction on the number of processes allowed per user is set very low. This problem has been reported on CentOS platforms. To avoid this issue, this number can be increased by editing the /etc/security/limits.d/20-nproc.conf file and adding the following tab-separated text:

```
# Default limit for number of user's processes to prevent # accidental fork bombs.

*	soft	nproc	65535
```

b) System Swap Settings: When processing large amounts of data, IPOPP can cause Linux systems to allocate excessive swap space and hold onto it indefinitely. Eventually the system will run out of swap space completely and crash. To avoid this, do the following:

- edit /etc/sysctl.conf and add this line:

  vm.swappiness = 1

- reboot your machine.

Appendix B
IPOPP Dashboard

Purpose: The IPOPP Dashboard has two modes: Configuration Editor Mode and Process Monitor Mode. In Configuration Editor Mode, the Dashboard allows you to enable or disable SPAs that are already installed. In Process Monitor Mode, the Dashboard allows you to perform IPOPP operations (Start/Stop/Check/Reset), as well as Monitor the ON/OFF/Processing status of SPAs.

Invoking the Dashboard and Its Modes: The IPOPP Dashboard is invoked with the following command:

```
$HOME/drl/tools/dashboard.sh &
```

This command opens up the IPOPP Dashboard in Process Monitor Mode. The Process Monitor functionality and IPOPP utilities are available only in this mode. Enabling and disabling of SPAs and selection of projection (for H2G_SPA) and compositing tiles (for BURNSCAR_SPA and VIIRS-BURNSCAR_SPA) can be done by switching to the Configuration Editor Mode. Switching between modes is available via the “Mode” Menu Item on the Dashboard Window.

Detailed Description: Please refer to Figures B-1a and B-1b depicting the IPOPP Dashboard in Configuration Editor Mode and Process Monitor Mode, respectively. Table B-1 contains descriptions of the GUI components of the Dashboard. Use the diagram indices to map the corresponding GUI component to its location in the figures.

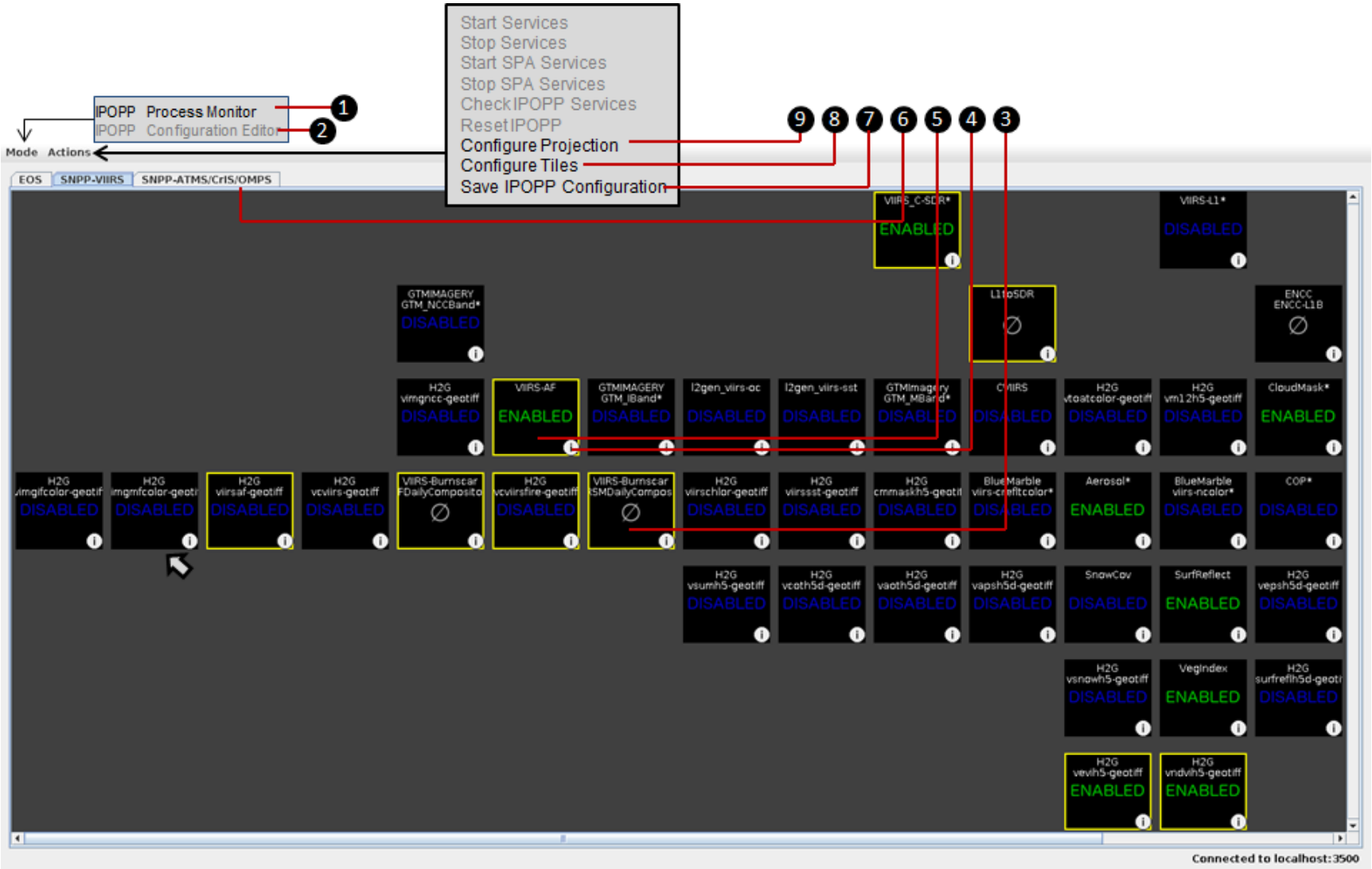

Figure B-1a. IPOPP Dashboard: Configuration Editor Mode

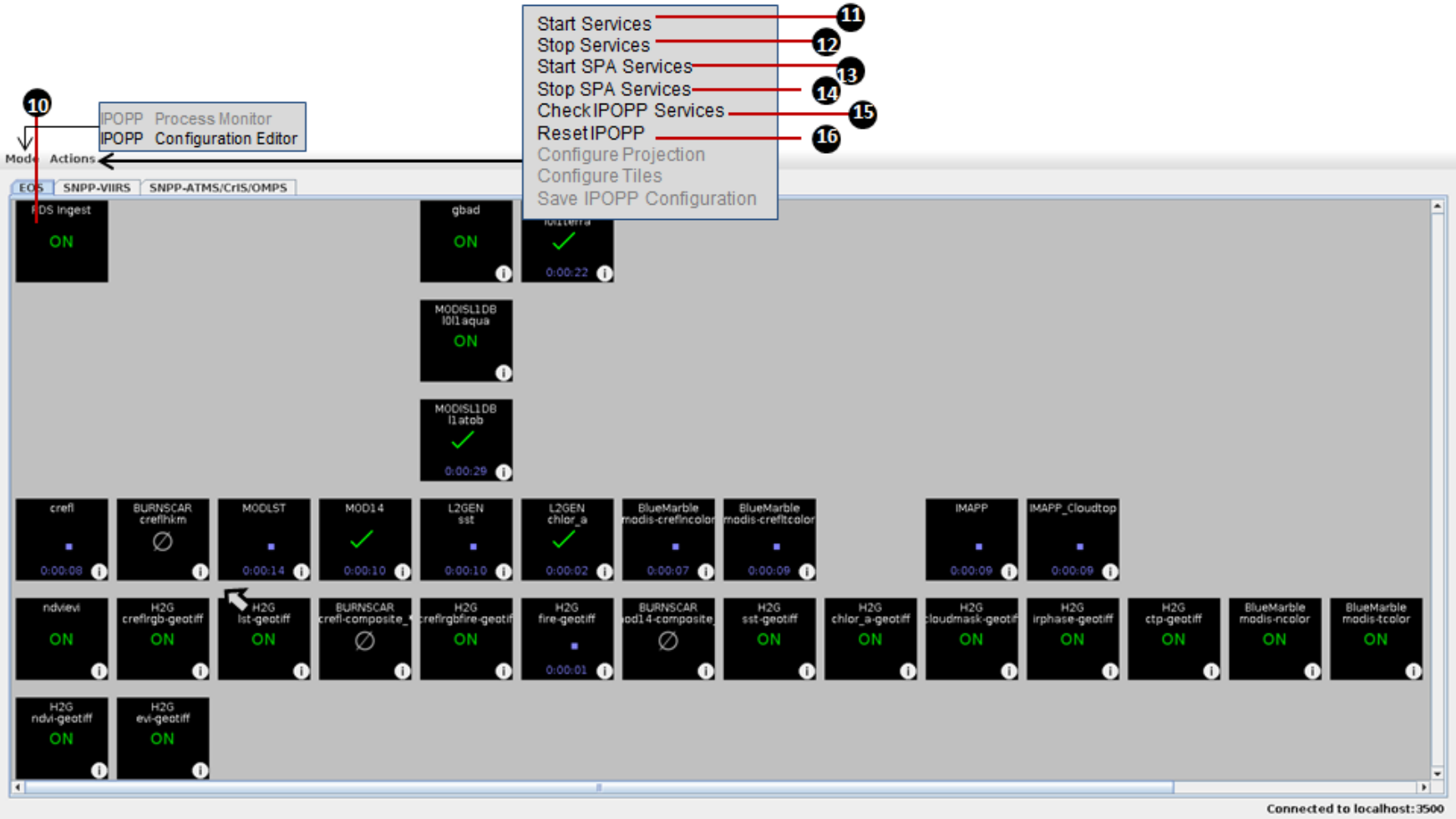

Figure B-1b. IPOPP Dashboard: Process Monitor Mode

Table B-1: IPOPP Dashboard Description

Diagram Index	GUI Component	Description
1	**Mode> IPOPP Process Monitor**	Switch to the Process Monitor Mode.
2	**Mode> IPOPP Configuration Editor**	Switch to the Configuration Editor Mode.
3	**SPA Service**	<u>In the Configuration Editor Mode</u> this unit acts as a toggle button to allow users to enable or disable the SPA service. In this mode the state can be one of the following: ENABLED — The SPA service is enabled. DISABLED — The SPA service is disabled. ∅ — The SPA service is not installed. You may download SPAs from the DRL Web Portal and install them as described in Appendix E, "Installing/Updating/ Configuring SPAs." Please note that an SPA service must be enabled to be started by 'Action>Start Services' or 'Action>Start SPA Services'. Starting of IPOPP Services (including SPA Services) has to be done as a separate step after returning to the Process Monitor Mode. <u>In the Process Monitor Mode</u> this unit reports the ON/OFF/Processing status of the SPA service. In this mode the state can be one of the following: ON — The SPA service is running. OFF — The SPA service is not running either because the SPA service is disabled or because IPOPP SPA services are not running. ERROR — The SPA service failed to start. ∅ — The SPA service is not installed. You may download SPAs from the DRL Web Portal and install them as described in Appendix E, "Installing/Updating/ Configuring SPAs." ↓ — The SPA service is ingesting data. Processing is about to start. ■ h:mm:ss — The SPA service is processing. The timer below shows the time elapsed since processing started. ✓ h:mm:ss — The SPA service successfully processed. The timer below shows the time it took to complete processing. ! h:mm:ss — The SPA service generated a warning during processing but was otherwise successful. Some warnings are harmless. For example, some algorithms are Daytime algorithms and generate warnings when enough daytime scans are not available. Additional information about the warning can be obtained from the SLS database. Refer to Appendix F., "IPOPP

		Monitoring." The timer below shows the time it took to complete processing. The SPA service encountered an error during processing (refer to Appendix H). The timer below shows how long it ran before it failed.
4	**Product Information Button**	Clicking on this button will open up a dialog box identifying the data products generated by the SPA service.
5	**SPA Relationship Highlight**	Only available in Configuration Editor Mode. Moving your mouse over an SPA Service highlights the SPA service's immediate upstream and downstream SPA services. Note that the immediate upstream SPA services may depend on their own upstream SPA services, which in turn can have their own prerequisites. In order to correctly enable a SPA service you must follow the dependencies all the way up the processing chain and enable all predecessor SPA services.
6	**Mission/Sensor Tabs**	SPA services are distributed in several tabs. Depending on IPOPP's configuration, any of the following tabs may be visible: (i) the "EOS" tab shows SPA services that process data from Terra/Aqua MODIS; (ii) the "SNPP-VIIRS" tab shows SPA services that process SNPP VIIRS data; and (iii) the "SNPP-ATMS/CrIS/OMPS" tab shows SPA services that process SNPP ATMS, CrIS and OMPS data; (iv) the "JPSS-1-VIIRS" tab displays SPA services that process JPSS-1 VIIRS data; and (v) the "SNPP-ATMS/CrIS/OMPS" tab displays SPA services that process SNPP ATMS, CrIS and OMPS data.
7	**Action>Save IPOPP Configuration**	Only available in Configuration Editor Mode. Allows you to save the current Configuration.
8	**Action> Configure Tiles**	Only available in Configuration Editor Mode. Clicking on this button will open up a dialog box that allows you to select tiles (up to a maximum of 10) and configure IPOPP's BURNSCAR SPAs (if installed). Refer to BURNSCAR SPA User's Guide for more details.
9	**Action> Configure Projection**	Only available in Configuration Editor Mode. Clicking on this button will open up a dialog box that allows you to select either 'Geographic' or 'Stereographic' projection from a drop-down menu and configure IPOPP's H2G_SPA accordingly. See H2G_SPA User's Guide for more details.
10	**Ingest Display Unit**	Only available in Process Monitor Mode. This unit reports the ON/OFF status of the IPOPP Ingest Services. On the EOS tab it reports the status of the PDS Ingest Services, while on the SNPP tabs it reports the status of the xDR Ingest Services.
11	**Action>Start Services[1]**	Only available in Process Monitor Mode. Clicking on this will start all IPOPP Services.
12	**Action>Stop Services[2]**	Only available in Process Monitor Mode. Clicking on this will stop all IPOPP Services.

13	**Action>Start SPA Services[1]**	Only available in Process Monitor Mode. Clicking on this will start IPOPP's SPA Services. Caution: Starting SPA Services will not start other IPOPP services that are required for IPOPP processing. Use this option when you are sure that other IPOPP Services are already running. If in doubt, use the "Action>Start Services" option.
14	**Action>Stop SPA Services[2]**	Only available in Process Monitor Mode. Clicking on this will stop IPOPP's SPA Services.
15	**Action>Check IPOPP Services[1]**	Only available in Process Monitor Mode. This will check the status of all IPOPP services and determine System Health. It will list the services that are not running. If System Errors are detected, it will provide an option for users to restore IPOPP health. In that case, click 'OK' to restore System Health. This should resolve the detected system errors and stop services. Users will be provided an option to start services once the process is complete.
16	**Action>Reset IPOPP**	Only available in Process Monitor Mode. Clicking on this will reset IPOPP. An IPOPP reset can be used to recover from unexpected IPOPP errors. A reset will stop the IPOPP Services, clear product registration from the IPOPP database and remove ancillary and data product files. **NOTE:** IPOPP reset deletes all data products. Copy data products that you wish to retain to another location before you reset IPOPP**.**

[1]**NOTE:** Log files created by any failing SPA in its corresponding run directory are cleared by "Actions>Start Services", "Actions>Start SPA Services", or when restoring system health from "Actions> Check IPOPP Services". Refer to Appendix H, "Diagnosing and Recovering from IPOPP Operational Errors**.**"

[2]**NOTE:** Choose a time of data processing inactivity to stop IPOPP services or stop SPA services.

Appendix C
Science Processing Algorithms and Products

Table C-1 lists Science Processing Algorithms (SPAs) included in this package, along with the data products they produce. More detailed descriptions of SPAs are contained in the respective SPA User's Guides available with the SPA packages.

Table C-1: SPAs and Output Products

SNPP/JPSS SPAs	Version Included	Output Products
C-SDR	2.6	VIIRS Imagery resolution SDRs VIIRS Moderate resolution SDRs VIIRS Day/Night Band (DNB) SDR VIIRS On Board Calibrator Intermediate Product (IP) VIIRS Calibrated Dual Gain IP VIIRS Geolocation products ATMS SDR ATMS Temperature Data Record (TDR) ATMS Geolocation products CrIS SDR CrIS Full Spectral (FS) SDR CrIS Geolocation products
VIIRS-L1	3.0.0a	VIIRS Level 1A and 1B data VIIRS Geolocation data VIIRS Onboard Calibration data
L1toSDR	1.4	VIIRS SDRs VIIRS Geolocation Products
ENCC	1.8	VIIRS Enhanced Near Constant Contrast
CVIIRS	1.1	VIIRS Imagery and Moderate Resolution Corrected Reflectance Level2 Products
GTMimagery	1.5.08.04	VIIRS I-Band Ground Track Mercator (GTM) Imagery EDR VIIRS M-Band GTM Imagery EDR VIIRS Near Constant Contrast (NCC) Albedo GTM Imagery EDR
L2GEN	9.3.0	VIIRS Ocean Color VIIRS Sea Surface Temperature
CloudMask	1.5.08.04	VIIRS Cloud Mask IP
LST	1.5.08.04	VIIRS Land Surface Temperature EDR
Aerosol	1.5.08.04	VIIRS Aerosol Optical Thickness (AOT) IP VIIRS Aerosol Model Index (AMI) IP VIIRS Aerosol Environmental Data Record (EDR) VIIRS Suspended Matter (SM) EDR VIIRS Aerosol Geolocation
SurfReflect	1.5.08.04	VIIRS Land Surface Reflectance IP
VegIndex	1.5.08.04	VIIRS Vegetation Index EDR
COP	1.5.08.04	VIIRS Cloud Optical Properties IP VIIRS Ice & Night Water Cloud Top Temperature IP
SnowCov	1.5.08.04	VIIRS Snow Binary Map EDR VIIRS Snow Fraction EDR
VIIRS-AF (NASA Algorithm)	1.3.6	VIIRS Active Fire Level 2 VIIRS Fire Location Text File

OMPSnadir	2.6.7	OMPS Nadir Mapper Earth View L1A (OMPS-NPP_NMEV_L1A OMPS Nadir Mapper Earth View L1B (OMPS-NPP_NMEV_L1B) OMPS Nadir Mapper Total Column Ozone L2 (OMPS-NPP_NMTO3-L2) OMPS Nadir Mapper Total SO2 L2 (OMPS_NPP_NMSO2_PCA_L2) OMPS Nadir Profiler Earth View L1A (OMPS-NPP_NPEV_L1A) OMPS Nadir Profiler Earth View L1B (OMPS-NPP_NPEV_L1B) PNG image for Ozone PNG image for Reflectivity at 331nm PNG image for Ultraviolet Aerosol
VFIRE375	3.0.0	VIIRS I-Band Active Fires EDR VIIRS I-Band Fire Location text file
MODIS SPAs	**Version Included**	**Output Products**
GBAD	2.7	Aqua GBAD Ephemeris and Attitude files
MODISL1DB	1.8	MODIS Level 1A (MOD01/MYD01) and Geolocation (MOD03/MYD03) MODIS Level 1B 1 km (MOD021KM/MYD021KM), half km (MOD02HKM/MYD02QKM), and quarter km (MOD02QKM/MYD02QKM) products
IMAPP	3.1.1	MODIS Cloudmask Level 2(MOD35) MODIS Cloudtop Properties, Cloud Phase and Cloud Optical properties Level 2 (MOD06) MODIS Atmospheric Profiles Level 2(MOD07) MODIS Aerosol Level 2(MOD04) **NOTE:** The IPOPP package does not contain the optional IMAPP*_MOD06OD_COEFF.tar.gz coefficient files tar file. This file is available on the DRL Web Portal and may be optionally installed to enable the MODIS Cloud Optical Properties software module (MOD06OD). Additional instructions are available in the IMAPP_SPA User's Guide.
L2GEN	9.3.0	MODIS Ocean Color Level 2 (daytime product, includes Chlorophyll-a [CHLOR_A] concentration) MODIS Sea Surface Temperature (SST) Level 2
MOD14	6.2.1	MODIS Active Fire Level 2 MODIS Fire Location Text File
CREFL	1.7.1	MODIS Corrected Reflectance Level 2 (daytime product)
NDVIEVI	2.2	MODIS Vegetation Indices (MOD13) Level 2
MODLST	4.14	MODIS Land Surface Temperature Level 2
Other SPAs	**Version Included**	**Output Products**
H2G	2.5	Geolocated GeoTIFF images, for various parameter datasets in SNPP and JPSS SPA products and MODIS Level 2 SPA products. H2G also creates standard true color images for supported VIIRS and MODIS science products.
BlueMarble	2.2	Aqua/Terra MODIS Sharpened Corrected Reflectance HDF - True Color Bands Aqua/Terra MODIS Sharpened Corrected Reflectance HDF - Natural Color Bands Aqua/Terra MODIS Sharpened True Color geotiff Aqua/Terra MODIS Sharpened Natural Color geotiff SNPP/NOAA-20 VIIRS Sharpened Corrected Reflectance HDF - True Color Bands SNPP/NOAA-20 VIIRS Sharpened True Color geotiff SNPP/NOAA-20 VIIRS High Resolution Natural Color geotiff SNPP/NOAA-20 VIIRS ENCC Day/Night geotiff

Appendix D
Location of Ancillaries and Data Products

Table D-1 contains the locations of the ancillaries and processed sensor data products.

Table D-1. Locations of Ancillaries and Products

Directory Location	Ancillaries/Products
$HOME/drl/data/pub/ancillary	Subdirectories under this folder hold registered ancillaries required for real-time processing.
$HOME/drl/data/pub/ArchivedAncillary	Subdirectories under this folder hold registered ancillaries required for non-real time processing.
$HOME/drl/data/pub/gsfcdata/terra/modis/level{0,1,2}	Terra MODIS Level 0, Level 1 and Level 2 products
$HOME/drl/data/pub/gsfcdata/aqua/modis/level{0,1,2}	Aqua MODIS Level 0, Level 1 and Level 2 products
$HOME/drl/data/pub/gsfcdata/combined/modis/level3	Geotiff products derived from multiple spacecraft- e.g. Aqua/Terra Composite Daily products (produced only when MODIS BurnScar SPA is installed)
$HOME/drl/data/pub/gsfcdata/aqua/gbad/	Aqua GBAD Level 0, ephemeris and attitude files
$HOME/drl/data/pub/gsfcdata/npp/viirs/level{0,1,2}	SNPP VIIRS PDS/RDRs, SDRs and EDRs
$HOME/drl/data/pub/gsfcdata/npp/atms/level{0,1}	SNPP ATMS RDRs, SDRs
$HOME/drl/data/pub/gsfcdata/npp/cris/level{0,1}	SNPP CrIS RDRs, SDRs
$HOME/drl/data/pub/gsfcdata/npp/omps/level{0,1,2}	SNPP OMPS PDSs, Level 1 and Level 2 products
$HOME/drl/data/pub/gsfcdata/npp/spacecraft/level0	SNPP spacecraft PDSs
$HOME/drl/data/pub/gsfcdata/jpss1/viirs/level{0,1,2}	JPSS-1 VIIRS PDS/RDRs, SDRs and EDRs
$HOME/drl/data/pub/gsfcdata/jpss1/atms/level{0,1}	JPSS-1 ATMS RDRs, SDRs
$HOME/drl/data/pub/gsfcdata/jpss1/cris/level{0,1}	JPSS-1 CrIS RDRs, SDRs
$HOME/drl/data/pub/gsfcdata/npp/jpss1/level{0,1,2}	JPSS-1 OMPS PDSs, Level 1 and Level 2 products
$HOME/drl/data/pub/gsfcdata/jpss1/spacecraft/level0	JPSS-1 spacecraft PDSs

Appendix E
Installing/Updating/Configuring SPAs

Science Processing Algorithms (SPAs) are remote sensing science algorithms packaged with the DRL's algorithm wrapping technique. This algorithm wrapper provides a common command and execution interface to encapsulate multi-discipline, multi-mission science processing algorithms. Once packaged as an SPA, a science algorithm can be plugged into IPOPP for automatic processing.

This version of IPOPP already contains the most current SNPP SPAs and Terra/Aqua MODIS SPAs available at the time of release; it also contains Engineering Versions of NOAA-20 SPAs. For the list of SPAs included in this package refer to Appendix C, "Science Processing Algorithms and Products." New or updated SPAs will be made available via the DRL Web Portal. Go to https://directreadout.sci.gsfc.nasa.gov/?id=software for the most current list of SPAs and products supported by IPOPP. Follow the instructions below for installing new or updated SPAs into an existing IPOPP.

NOTE: To pre-configure the H2G_SPA and BURNSCAR SPAs without reinstallation, use the IPOPP Dashboard (refer to Table B-1, "IPOPP Dashboard Description"). For other SPAs that need some pre-configuration, please refer to the corresponding SPA User's Guides.

1. Download algorithm_versionno_SPA_wrapperversionno.tar.gz into $HOME/drl
   Go to https://directreadout.sci.gsfc.nasa.gov/?id=software and select the SPA to be installed by clicking on the hyperlink. Follow the prompts and download the compressed archive file to the $HOME/drl/ subdirectory. The SPA compressed archive file name will be of the form: *algorithm_versionno*_SPA_*wrapperversionno*.tar.gz (e.g, C-SDR_2.4_SPA_2.4.tar.gz).

   If there are any patches for this SPA, they will be available for download on the same page as the SPA itself. Download all patches and their README files.

2. Close any open GUI tools (e.g., the Dashboard).

3. cd $HOME/drl [Change Directory]

4. $HOME/drl/tools/install_spa.sh a*lgorithm_version*_SPA_*wrapperversion*.tar.gz [Install SPA]

   This will uninstall the current version of the SPA directory (if it exists), create a new <*spaname*> subdirectory in the $HOME/drl/SPA directory, and install the new SPA into IPOPP.

   NOTES:

   1. The install_spa.sh script will automatically update your Dashboard configuration to display the latest available SPA services. Your current SPA service settings will be saved, but SPA service blocks displayed on the Dashboard may be rearranged.

   2. The install_spa.sh script will automatically update all IPOPP ancillary retrievers to the most current versions available from the DRL.

5. rm $HOME/drl/*algorithm_version*_SPA_*wrapperversion*.tar.gz [Delete tarball]

6. Install any patches for this SPA [Install patches]
   If there are any patches for this SPA, install them now according to the instructions provided in the corresponding README file. Most patches can be installed by:
   - placing the patch file in $HOME/drl
   - running the patch installation script:

$HOME/drl/tools/install_patch.sh
*algorithm_version*_SPA_*wrapperversion_PATCH_patchversion*.tar.gz

7. Pre-configure if needed **[Skip this step if SPA(s) do not require pre-configuration]**
   Some SPAs require pre-configuration (e.g., H2G_SPA, BURNSCAR SPAs, GTMImagery_SPA). Refer to the corresponding SPA User's Guides for details on pre-configuration.

8. Configure IPOPP and start IPOPP services [Refer to Section 6, "IPOPP Operation"]
   The SPA is now ready to be enabled and run within IPOPP. The SPA installation process will have stopped all SPA services and the IPOPP ingest services. Use the IPOPP Dashboard to configure IPOPP and restart all services.

Appendix F
IPOPP Monitoring

IPOPP logs are contained in the System Event/Logging System (SLS) database. IPOPP provides scripts that may be used to interrogate the SLS database in order to monitor IPOPP processing and enable the user to:

- get logs for IPOPP as a whole in text form, so they can be searched and filtered with standard Unix tools;
- monitor IPOPP remotely;
- analyze logs for a given SPA service, to determine how long it takes to create products;
- run a script whenever products of a given type are created.

Monitoring IPOPP Logs

The script nsls/bin/print-logs.sh prints out log messages for all of IPOPP in a manner similar to the log messages found in the station.stationlog files. Each log message consists of one line of output, with fields separated by tab characters:

- Level - message severity (INFO, WARNING, ERROR);
- Date - date/time stamp, format is “Wed Dec 09 15:18:00 UTC 2015”;
- Host - host name of log client;
- Source - program that posted the message;
- Description - text of log message.

Here is an example WARNING log message:

WARNING Wed Dec 09 05:47:00 UTC 2015 is.sci.gsfc.nasa.gov IS/retriever FDF SFTP Aqua TLE Source available? TERRA/MOC/TER_TLE_20151209.txt

Here is an example ERROR message:

ERROR Wed Jan 20 15:47:34 UTC 2016 drlt2 NCS/VFIRE375 geotiff/VFIRE375 geotiff group1 NCS Error Exception Command Error:
name = Dsm_command (Element)
attribute = blockflag value = true
attribute = class value = DSM
attribute = debug value = {cfg_debug}
attribute = log value = true
attribute = method value = reserveProduct
attribute = result value = drl.npp.viirs.activefires375.hdf.OBJ

The nsls/bin/print-logs.sh script searches the log output for lines that begin with “INFO”, “WARNING”, or “ERROR”. The script will select and print the log events without extra debug output.

The nsls/bin/print-logs.sh script takes the following arguments to filter the log output:

-startdate yyyy-mm-ddThh:mm:ss
Defaults to now - 1 day. Note that the date/time is specified in ISO 8601 compatible format.

-enddate yyyy-mm-ddThh:mm:ss
Defaults to now. Note that the date/time is specified in ISO 8601 compatible format.

-eventlevel [iwe]
Selects for INFO(i), WARNING(w), ERROR(e) messages. More than one event type can be selected; for example, specifying -eventlevel we prints WARNING and ERROR messages. Defaults to iwe, or print all log messages.

-host NSLS-HOST
Defaults to localhost, i.e., the machine you are logged into. The -host argument can be used to access log messages on a remote IPOPP installation.

NOTE: TCP/IP port 3500 must be unblocked on the machine you are logged into and on NSLS-HOST for remote access to work.

Examples:

To print ERROR messages from the time period beginning 2016-02-02T21:45:00 and ending 2016-02-02T23:59:00:

```
$ $HOME/drl/nsls/bin/print-logs.sh -startdate 2016-02-02T21:45:00 -enddate 2016-02-02T23:59:00 -eventlevel e
```

To print all the log messages from the last 24 hours for a given IPOPP installation:

```
$ $HOME/drl/nsls/bin/print-logs.sh
```

To print only the WARNING and ERROR messages from the last 24 hours for a given IPOPP installation:

```
$ $HOME/drl/nsls/bin/print-logs.sh -eventlevel we
```

To print only the ERROR messages from the last 4 days for a given IPOPP installation:

```
$ $HOME/drl/nsls/bin/print-logs.sh -eventlevel e -startdate `date -d “now - 4 days” -Iseconds`
```

As an example of using print-logs.sh to automatically monitor IPOPP, here is a script named print_ipopp_errors.sh that will print all IPOPP ERROR messages from the last 24 hours and email them to ipopp.monitor@nasa.gov. (Note that your IPOPP host machine must be configured to send email.)

```
#!/bin/bash

# Print all the error messages from the last 24 hours
$HOME/drl/nsls/bin/print-logs.sh -eventlevel e > /tmp/ipopp.errors

# Count the number of messages in the file
howmany=`egrep '^ERROR' /tmp/ipopp.errors | wc -l`

# Format the output a little bit and put it into a mail message
(echo -n $howmany “IPOPP errors for 24 hours ending”; date;
        echo;
        cat /tmp/ipopp.errors) \
        | mail -s “IPOPP error log summary” ipopp.monitor@nasa.gov
```

Store this script in a convenient place (for example, $HOME/drl), make it executable, and replace ipopp.monitor@nasa gov with your email address. You can then create a cron job to run it once a day (look at the crontab(1) manual entry for details), and your chosen email address will receive a message every day summarizing any errors detected by the IPOPP system. The body of the email message will look like this:

6 IPOPP errors for 24 hours ending Wed Jan 20 15:57:40 UTC 2016

ERROR Wed Jan 20 15:47:34 UTC 2016 drlt2 NCS/VFIRE375 geotiff/VFIRE375 geotiff group1 NCS Error Exception Command Error:

```
name = Dsm_command (Element)
    attribute = blockflag   value = true
    attribute = class       value = DSM
    attribute = debug       value = {cfg_debug}
    attribute = log value = true
    attribute = method      value = reserveProduct
    attribute = result      value = drl.npp.viirs.activefires375.hdf.OBJ
```

Common Monitoring Tasks

Four common monitoring tasks utilizing the script nsls/bin/print-logs.sh are described in this section. Refer to Appendix H, “Diagnosing and Recovering from IPOPP Operational Errors” for specific applications of these tasks when diagnosing and resolving issues encountered during IPOPP processing.

Task 1: Check status of IPOPP ancillary retrieval system
To view any recent WARNING or ERROR messages from the IPOPP ancillary retrieval system:

```
$ $HOME/drl/nsls/bin/print-logs.sh -eventlevel we | grep IS/retriever
```

This command will print only the WARNING and ERROR log messages from the IPOPP ancillary retrieval system (known internally to the SLS database as “IS/retriever”) for the last 24 hours. Some ancillary types are retrieved at weekly intervals, so to see warnings and errors related to all ancillaries it may be necessary to widen the print-logs.sh time window using a -startdate `date -d “now - 7 days” -Iseconds` option, like this:

```
$ $HOME/drl/nsls/bin/print-logs.sh -eventlevel we -startdate `date -d “now - 7 days” -Iseconds`
| grep IS/retriever
```

If there are no log messages, or the messages all look like transient network problems, then the ancillary retrieval system is running normally.

To examine any errors in more detail, pipe the log messages through the 'less’ tool:

```
$ $HOME/drl/nsls/bin/print-logs.sh -eventlevel we | less
```

Search for the string “IS/retriever” with the '/’ command to view details of any IPOPP ancillary retrieval system problems.

Task 2: Check for SPA service warnings and errors, diagnose any found
To view any recent WARNING or ERROR messages from IPOPP SPA services:

```
$ $HOME/drl/nsls/bin/print-logs.sh -eventlevel we | grep NCS/
```

This command will print only the WARNING and ERROR log messages from IPOPP's SPA services (known internally to the SLS database as "NCS/<name-of-SPA-service>"). If there are no log messages, or the messages all look like transient conditions, IPOPP's SPA services are running normally.

To examine any errors in more detail, pipe the log messages through the 'less' tool:

```
$ $HOME/drl/nsls/bin/print-logs.sh -eventlevel we | less
```

Search for the string "NCS/" with the '/' command to see details of your IPOPP's SPA service warnings and errors. Table F-1 contains common warnings and errors.

Table F-1. Common Warnings and Errors

Level	"Text:" section of Diagnostic back trace text	Diagnosis
ERROR	"NCS Error Exception Command Error: … attribute = methodvalue = getTimedAncillary attribute = resultvalue = <ancillary-type>"	Required ancillaries were missing during processing. The <ancillary-type> field will indicate the type of ancillary that is missing.
ERROR	"NCS Error Exception Command Error: name = RunAlgorithm (Element)"	The SPA service has failed while executing the algorithm. The point of failure can be obtained from the "Caused by: ….: RUN program failed with return code while executing: <command line>" line in the 'Throwable' section of the diagnostic back trace text.
ERROR	"Station ending on error maximum allowed failed jobs exceeded"	The SPA service has failed 5 times in a row and has been turned OFF automatically. This is a safeguard for user awareness. Previous ERROR messages from this SPA service will indicate the reason for the successive failures.
WARNING	"No ancillary for <ancillary-type> found: …."	Optimal ancillaries were missing during processing. Processing has been done using alternative ancillaries.
WARNING	"Insufficient number of Day scans, processing will not continue on this granule"	This is a harmless warning and is intended to inform the users that a daytime product is not produced when an overpass does not have enough day scans.
WARNING	"The CrIS SDR will not process this CrIS RDR because it has less than 9 granules, or contains non-contiguous granules"	CrIS SDR does not process when there are not enough granules or the data is too noisy (i.e., missing granules).

Task 3: Identify the overpass related to an SPA service warning or error
Use the procedure in Task 2 to get the log messages of interest. The second field of each log message contains the date and time when the error occurred. Make a note of this time stamp, then use print-logs.sh to view the log messages around that time (plus or minus 5 minutes is usually sufficient).

If, for example, you have an ERROR message with a time stamp of “Wed Jan 20 15:47:34 UTC 2016”, this command will dump all the log messages near that time so you can search them with the 'less’ command:

```
$ $HOME/drl/nsls/bin/print-logs.sh -startdate “2016-01-20T15:42:00” -enddate “2016-01-20T15:52:00” | less
```

Use the '/’ command in 'less’ to look for log messages from the SPA service in question; their Source fields will contain “NCS/” followed by the name of the SPA service.

Messages with text like “scan start time is <scan start date/time>“ or “File name is <file-name-with-scan-start-time-stamp>“ will provide the overpass start time.

Task 4: Determine if the IPOPP system is missing required ancillaries
Use the procedure in Task 2 above to get log messages from SPA services, and see if any of them are caused by missing ancillary files. There will probably be other warning or error messages from the IPOPP ancillary retrieval system related to those ancillaries; use the procedure in Task 1 to view them.

SPA Monitoring

In addition to storing log events in the SLS database, IPOPP SPA services store a text version of log events in a file in their station directory. Each SPA service is represented by a directory in $HOME/drl/ncs/stations; each of those directories contains a file named station.stationlog where log events are written as they occur, one line of text per event. Scripts that may be used to process and monitor these logs are contained in $HOME/drl/tools.

SPAruntime.sh
This script processes a station.stationlog file, finds each execution of the SPA service, and prints how long the SPA service took to create each set of outputs. It takes one argument, the name of a station.stationlog file (the l0l1aqua station.stationlog file is used in the example below). A typical run of SPAruntime.sh looks like this:

```
$ $HOME/drl/tools/SPAruntime.sh $HOME/drl/ncs/stations/l0l1aqua/station.stationlog
Outputs:
/home/ipopp/drl/data/pub/gsfcdata/aqua/modis/level1/MYD01.15287075951.hdf
/home/ipopp/drl/data/pub/gsfcdata/aqua/modis/level1/MYD03.15287075951.hdf
Elapsed time: 28 seconds

Outputs:
/home/ipopp/drl/data/pub/gsfcdata/aqua/modis/level1/MYD01.15287172626.hdf
/home/ipopp/drl/data/pub/gsfcdata/aqua/modis/level1/MYD03.15287172626.hdf
Elapsed time: 71 seconds
…
```

SPArunonend.sh
This script can monitor an SPA service’s station.stationlog file and run a command whenever the SPA service creates a new set of products. The script receives the list of output files created as arguments.

It takes one required argument, the name of a script to run (full path required), and one optional argument, the name of a station.stationlog file to monitor (it processes standard input if no argument is given, which is useful for testing).

Example: Do the following on an IPOPP system that has been run and created some products, but is not currently running. Create a simple command to run when an SPA service finishes processing. If you are using the bash shell, copy-pasting the indented lines below into a command line will create a script called runme.sh in your home directory:

```
cat <<-'END'> ~/runme.sh
#!/bin/bash
echo SPA service finished - outputs are:
for x in $*
do
    echo $x
done
END
```

Make the runme.sh script executable:

```
$ chmod a+x ~/runme.sh
```

And test it – you should see output like this:

```
$ ~/runme.sh file1 file2 file3
SPA service finished: outputs are:
file1
file2
file3
$
```

Run SPArunonend.sh with the runme.sh script, feeding it a station.stationlog file. The example below uses the l0l1aqua station.stationlog file:

```
$ cd $HOME/drl/tools
$ ./SPArunonend.sh ~/runme.sh < $HOME/drl/ncs/stations/l0l1aqua/station.stationlog
```

If the l0l1aqua SPA service has created any outputs, the runme.sh script will print lines that look like this:

```
SPA service finished: outputs are:
/home/ipopp/drl/data/pub/gsfcdata/aqua/modis/level1/MYD01.15287075951.hdf
/home/ipopp/drl/data/pub/gsfcdata/aqua/modis/level1/MYD03.15287075951.hdf
:
SPA service finished: outputs are:
/home/ipopp/drl/data/pub/gsfcdata/aqua/modis/level1/MYD01.15287172626.hdf
/home/ipopp/drl/data/pub/gsfcdata/aqua/modis/level1/MYD03.15287172626.hdf
```

To make the SPArunonend.sh script monitor the SPA service and run when new outputs appear, run it in the background:

```
$ ./SPArunonend.sh ~/runme.sh $HOME/drl/ncs/stations/l0l1aqua/station.stationlog &
```

```
[1] 22437
$
```

The “[1] 22437” above are the job number and process ID of the SPArunonend.sh script; it is now watching the station.stationlog file from the background.

Start IPOPP services and ingest Aqua PDS file pairs for processing. As each set of Aqua data finishes Level 0 to Level 1 processing, the ~/runme.sh script will be executed and lines like these will be printed:

```
SPA service finished: outputs are
/home/ipopp/drl/data/pub/gsfcdata/aqua/modis/level1/MYD01.15287075951.hdf
/home/ipopp/drl/data/pub/gsfcdata/aqua/modis/level1/MYD03.15287075951.hdf
```

To stop the monitoring, find the background script and kill it:

```
$ ps -C SPArunonend.sh
  PID TTY          TIME CMD
8400  pts/11   00:00:00 SPArunonend.sh
$ kill -- -8400
$
```

NOTE: Stopping IPOPP services and restarting them will remove and recreate the station.stationlog file being monitored. To re-enable monitoring, kill the background script and start a new one.

Appendix G
Pass Manager

Purpose: The Pass Manager facilitates:

1. The reprocessing of SNPP/JPSS RDR files and Terra/Aqua/SNPP/JPSS PDS (packet file and CSR) file pairs corresponding to a satellite overpass, resulting in the regeneration of all downstream science data products associated with the overpass. The Reprocess utility may be useful after the installation of a newer version of an SPA into IPOPP. When a newer version of an SPA is installed, it will start producing science products for all subsequent overpasses. You may use the Reprocess utility to reprocess older overpasses. Reprocessing may also be useful after a system error. The Pass Manager Table may be used to select and reprocess overpasses that were being processed at the time of the error. In this case reprocessing is recommended to ensure that all downstream data products are generated.
2. The deletion of all science data products (including the SNPP/JPSS RDR file or Terra/Aqua/SNPP/JPSS PDS [packet file and CSR] file pairs) associated with a satellite overpass.

Invoking the Pass Manager: The Pass Manager Table can be launched using the command line:

$HOME/drl/dsm/gui-scripts/passmanager.sh &

Detailed Description: The Pass Manager Table is depicted in Figure G-1. Table G-1 describes its GUI components and how to use them to perform reprocessing and deletion. Use the diagram indices to map the corresponding GUI component to its location in Figure G-1.

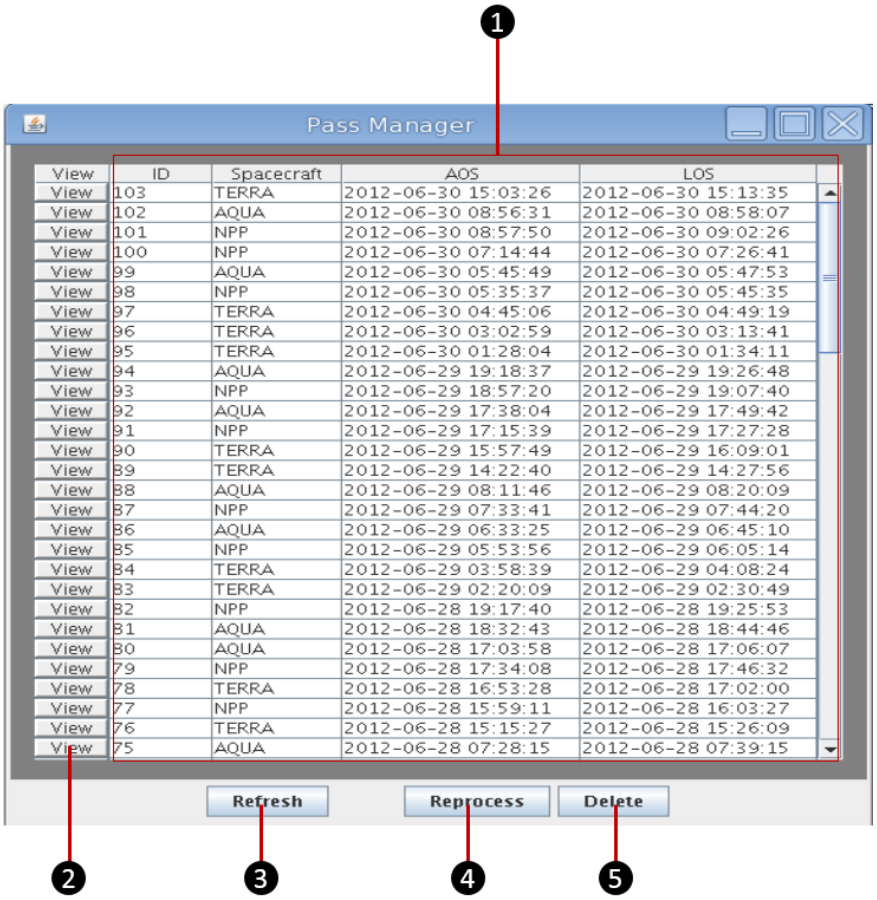

Figure G-1. Pass Manager Table

Table G-1: Pass Manager Table Components

Diagram Index	GUI Components	Description
1	**Pass Manager Display Window**	Each row in the Pass Manager Table represents a satellite/sensor overpass that has been registered with the IPOPP database, and includes the following information associated with the overpass: a) Pass ID; b) Spacecraft; c) Acquisition of Signal (AOS) (start time of satellite overpass); d) Loss of Signal (LOS) (end time of satellite overpass). The table defaults to sorting by pass ID. Click on the column labels to sort the table by different values
2	**View**	The View button can be used to view details such as start, stop and creation time about products associated with an overpass.
3	**Refresh**	By clicking 'Refresh', the table will be updated to the most current state. The table does not update automatically.
4	**Reprocess**	**NOTE**: Be sure to stop SPA services before selecting passes to reprocess. Click on a single row or multiple rows (by holding down the CTRL key) to select a single overpass or multiple overpasses. Click on 'Reprocess', and a dialog box will ask for confirmation. Clicking 'Yes' on the confirmation dialog box will result in deletion of all science products associated with the selected overpass(es) [except the root SNPP/JPSS RDR file(s) or the Terra/Aqua/SNPP/JPSS PDS file pair(s)] and complete reprocessing of the overpass(es) (i.e., re-runs of relevant SPAs and regeneration of all science data products associated with the overpass). Reprocessing will begin when SPA services are restarted.
5	**Delete**	**NOTES**: 1. Be sure to stop SPA services before selecting passes to delete. 2. Please use caution when using the Delete utility, as it is irreversible. Click on a single row or multiple rows (by holding down the CTRL key) to select a single overpass or multiple overpasses. Click on 'Delete', and a dialog box will ask for confirmation. Clicking 'Yes' on the confirmation dialog box will result in the unregistering and deletion of all science data products associated with the overpass(es), including the SNPP/JPSS RDR files and Terra/Aqua/SNPP/JPSS PDS (packet file and CSR) file pairs. The delete operation may take some time. Wait for the message box to confirm that the delete was successful, then click on the 'Refresh' button to view the changes.

Appendix H
Diagnosing and Recovering from IPOPP Operational Errors

The most common problems IPOPP users may encounter are described below, along with possible causes and resolution strategies. If you are experiencing a problem that is not described here, you may search the MyDRL Forum at: https://directreadout.sci.gsfc.nasa.gov/?id=forum for similar issues/resolutions reported by other users. If you are still unable to resolve your problem, please post a question to the MyDRL Forum or use "Contact DRL" to submit your question directly: https://directreadout.sci.gsfc.nasa.gov/?id=dspContent&cid=66

Problem 1: An SPA service is failing (error messages returned by print-logs.sh, errors in Dashboard:Process Monitor):

Are you running out of hard disk space? Remove unwanted files (tar files or other non-IPOPP files) from the drl/ folder and use the Pass Manager Table 'Delete' utility to reclaim space under $HOME/drl/data.

Is your system running low on resources (e.g., low memory)? Try disabling some SPA services that are not needed (refer to Step 1 in Section 6, "IPOPP Operation"). Ensure that your system meets the recommended system requirements (refer to Appendix A, "System Requirements").

Are there clues in the FAIL directories? When a service fails, standard output (stdfile*), standard error (errfile*), and other log and intermediate files from the failed run are retained under drl/ncs/stations/<SPA service name>/FAIL* directories. If the error is obvious and resolvable, correct the problem and use the Pass Manager Table 'Reprocess' utility to reprocess the overpass (refer to Appendix G, "Pass Manager").

Was the SNPP/JPSS RDR file or Terra/Aqua/SNPP/JPSS PDS (packet file and CSR) file pair ingested correctly (i.e., is the RDR file or PDS file pair incomplete)? Delete the pass using the Pass Manager Table 'Delete' utility (refer to Appendix G, "Pass Manager") and follow the process documented in Step 3 in Section 6, "IPOPP Operation," to re-ingest the sensor data.

Does the error message indicate that the service is unable to obtain one or more ancillary files?

> Are you trying to process a real-time swath but the ancillary retrieval service is not running? Check the status of IPOPP services using the "Check IPOPP Services" menu option on the IPOPP Dashboard and if 'Ancillary Retriever and Registration Services' is reported as 'OFF', start IPOPP services using the 'Actions>Start Services' menu item on the IPOPP Dashboard (refer to Appendix B, "IPOPP Dashboard").
>
> None of the above seems to be the problem. It is possible that the IPOPP database has been corrupted and the existing ancillaries are not registered with the IPOPP database. Try resetting IPOPP using the "Actions>Reset IPOPP" menu option on the IPOPP Dashboard (refer to Appendix B, "IPOPP Dashboard").

Is your system able to run the core algorithm executables? An easy way to discover whether your system is able to run the core algorithm executables is to install the SPA testdata tar file and try to run the testscript (refer to the corresponding SPA User's Guide). If the testscript fails, your system may not meet the recommended system requirements (refer to Appendix A, "System Requirements" and the SPA User's Guide).

Problem 2: A product is not being produced.

Is the corresponding SPA installed? Install the SPA (refer to Appendix E, "Installing/Updating/Configuring SPAs").

Is the SPA service enabled? Use IPOPP Dashboard in Configuration Editor Mode to verify that the service is enabled (refer to Appendix B, "IPOPP Dashboard").

Are prerequisite SPA services enabled? Use Dashboard in Configuration Editor Mode to verify that prerequisite SPA services are enabled (refer to Appendix B, "IPOPP Dashboard").

Is the SPA service ON? Use Dashboard in Process Monitor Mode to verify status (refer to Appendix B, "IPOPP Dashboard"). If the service is OFF, try starting the service using the "Start Services" menu option on the IPOPP Dashboard (refer to Appendix B, "IPOPP Dashboard").

Has the SPA service been automatically turned OFF? Services will be turned OFF automatically if they fail 5 times in a row. The auto OFF feature is a safeguard for user awareness. This can happen when:

- the services have encountered corrupt data; or
- the requisite ancillaries are not present.

If the errors are due to SPA execution failures, the cause may be corrupt data. Use the "Start Services" menu option on the IPOPP Dashboard to restart IPOPP services. If you want to reprocess the affected data, use the Pass Manager to reprocess the overpass data. Please refer to Appendix F, "Task 3: Identify the overpass related to an SPA service warning or error" to identify the overpasses for reprocessing. If you encounter the same problem again, delete the corresponding overpasses using the Pass Manager's Delete function. Refer to (Appendix G, "Pass Manager") for details. Re-ingest the source sensor files after confirming that they are not corrupt.

If the errors are due to missing ancillaries refer to Appendix F, "Task 1: Check status of IPOPP ancillary retrieval system" to determine if you are having a persistent network problem. Please consult with your system administrator to fix the problem and then use the "Start Services" menu option on the IPOPP Dashboard to restart IPOPP services. Once ancillary retrieval services are confirmed to be operating normally, you can use the Pass Manager to reprocess the affected overpass data. Please refer to Appendix F, "Task 3: Identify the overpass related to an SPA service warning or error" to identify the overpasses for reprocessing.

Problem 3: Actions performed from the IPOPP Dashboard take an unexpectedly long time or seem to wait indefinitely.

Are you running out of resources? This rare event may occur if you are running all SPA services corresponding to both EOS and SNPP/JPSS missions simultaneously, or your computer does not meet the recommended system requirements. Do the following:

```
Abort (Ctrl-C) any IPOPP scripts that you may have invoked on the command line.
cd $HOME/drl                                          [Change directory]
$HOME/drl/tools/terminate_dashboard.sh                [Execute the script]
```

This will terminate all IPOPP services along with the Dashboard and any actions issued by it.

At this point we recommend that you reduce the number of enabled SPAs, or increase system memory.

<u>Problem 4:</u> An SPA service seems to be processing indefinitely (the timer on the SPA service on the IPOPP Dashboard reports an unreasonably long processing time).

<u>Is parallel processing enabled?</u> If parallel processing is enabled (refer to Appendix L Parallel Processing"), timers for services running in parallel will stop only when all parallel instances for that service finish processing. If a large amount of VIIRS data is presented to IPOPP, the timers for VIIRS_C-SDR and JPSS-1_VIIRS_C-SDR can easily run for hours as the system processes the data.

<u>Are IPOPP services functioning properly?</u> Stop IPOPP services using the "Stop Services" menu option on the IPOPP Dashboard. Next, restart IPOPP services using the "Start Services" menu option on the IPOPP Dashboard (refer to Appendix B, "IPOPP Dashboard"). Verify that the service is "ON" on the Dashboard Process Monitor. The SPA service should reinitiate processing of the same overpass that it was stuck on before the restart. If this results in another period of indefinite processing, proceed to the next step.

<u>Is this indefinite processing due to data corruption?</u> Identify the problematic overpass (refer to Appendix F, "Task 3: Identify the overpass related to an SPA service warning or error"). Stop IPOPP services using the "Stop Services" menu option on the IPOPP Dashboard (refer to Appendix B, "IPOPP Dashboard"). Next, use the Pass Manager utility to delete the problematic overpass (refer to Appendix G, "Pass Manager"). Now, restart IPOPP services using the "Start Services" menu option on the IPOPP Dashboard (refer to Appendix B, "IPOPP Dashboard"). Do not re-ingest the SNPP/JPSS RDR file or Terra/Aqua/SNPP/JPSS PDS (packet file and CSR) file pair corresponding to the corrupt overpass.

<u>Has the IPOPP database been corrupted?</u> Try resetting IPOPP using the "Actions>Reset IPOPP" menu option on the IPOPP Dashboard (refer to Appendix B, "IPOPP Dashboard"). Now, restart IPOPP services using the "Start Services" menu option on the IPOPP Dashboard (refer to Appendix B, "IPOPP Dashboard"). Restart IPOPP operation (refer to Section 6, "IPOPP Operation").

<u>Was the SPA installed correctly?</u> Download the latest version of the SPA from the DRL Web Portal and reinstall it (refer to Appendix E, "Installing/Updating/Configuring SPAs").

<u>Problem 5</u>. Data have been placed in the Landing Zone and ingest_ipopp.sh was run. Services were running, but no output was created.

<u>Are the data still present in the Landing Zone after ingest_ipopp.sh completed execution?</u> The data may be currently unsupported by IPOPP, or may not have mission-compliant filenames. Refer to Tables 1a and 1b for a list of all data types currently supported by IPOPP ingest, and their respective mission-compliant file naming conventions. Ensure that all data being ingested are supported by IPOPP and have mission-compliant filenames. Some data types may require corresponding file pairs to be present in order to be ingested (i.e., Aqua/Terra PDS file pairs, OMPS NP and TC RDRs); for such data types, ensure that corresponding files are also present in the Landing Zone.

<u>Did the data end up in the $HOME/drl/data/dsm/nisfes_data/FAILED subdirectory after running ingest_ipopp.sh?</u> This indicates that the Ingest service saw the data files, but rejected them for reasons that include:

- The data was previously ingested; it is already in IPOPP. If this is the case, there will be messages from the Ingest service in the IPOPP logs of the form "Pass *XXXX* already has a *drl.product.type*", where XXXX is a Pass number and *drl.product.type* is the IPOPP product type. To reprocess data in IPOPP without reingesting it, use the Reprocess button in the Pass Manager (see Appendix G). The Pass Manager can also be used to delete existing passes from IPOPP; the data can then be reingested by moving it from

$HOME/drl/data/dsm/nisfes_data/FAILED to $HOME/drl/data/dsm/ingest and running ingest_ipopp.sh again.

- The data is malformed; the ingest service rejected it because it could not read it. If this is the case, there will be messages from the Ingest service in the IPOPP logs describing the problems with the data files.

- The data files were too small to be processed. IPOPP's Ingest service rejects data files containing less than 60 seconds of data.

To search the IPOPP logs, use the print-logs.sh command. The messages wanted will be warnings and errors, and they will contain the word "mover", so the command used will be:

```
$ $HOME/drl/nsls/bin/print-logs.sh -eventlevel we | grep -i mover
```

See Appendix F for details on searching the logs.

Problem 6. SPAs failed, and I want to reprocess.

Identify and fix the source of the failures. Refer to "Problem 1: An SPA service is failing (error messages returned by print-logs.sh, errors in Dashboard: Process Monitor)". Now identify the problematic overpass (refer to Appendix F, "Task 3: Identify the overpass related to an SPA service warning or error"). Next, use the Pass Manager's 'Reprocess' utility to reprocess the problematic overpass (refer to Appendix G, "Pass Manager"). Do not re-ingest the SNPP/JPSS RDR file or Terra/Aqua/SNPP/JPSS PDS (packet file and CSR) file pairs corresponding to the problematic overpass.

Appendix I
Running IPOPP Without an Internet Connection

IPOPP needs an Internet connection (i) to update its real-time ancillary repository for real-time sensor data processing and (ii) to retrieve and register archived ancillaries for reprocessing. However, users who need to run IPOPP without an Internet connection can do so using the following procedures.

i. Copy the $HOME/drl/tools/utilities/retrieve_archived_ancillaries.sh and $HOME/drl/tools/utilities/retrieve_cumulative_ancillaries.sh scripts to a directory on another Linux system that has an Internet connection. **The Linux curl command must be available on this system.**

ii. Create a download directory (separate from the script directory) on the Internet-connected system.

iii. cd to the directory where you copied the scripts and run them as follows:

```
$./retrieve_cumulative_ancillaries.sh <path-to-download-directory>
```

Example: $./retrieve_cumulative_ancillaries.sh $HOME/Download/

```
$./retrieve_archived_ancillaries.sh <yyyy-mm-dd> <path-to-download-directory>
```

Example: $./retrieve_archived_ancillaries.sh 2014-02-15 $HOME/Download/

Where <yyyy-mm-dd> refers to the date for which you wish to do processing. The date is available from the names of the RDR/PDS files that you wish to ingest. Refer to Tables 1a and 1b for mission-compliant file-naming conventions. These scripts will automatically identify and download archived cumulative ancillaries (leapsec*, utcpole*, MXD02_*.hdf) and ancillary tarballs (DRLAncillary_YYYY-MM-DD.tgz) from the DRL's ancillary repository into the <download-directory> identified on the command lines above.

NOTES:

1. You will have to run the retrieve_archived_ancillaries.sh script more than once with unique date arguments if you wish to process sensor data from multiple dates.
2. retrieve_cumulative_ancillaries.sh also retrieves updates for the IPOPP Dashboard configuration and IPOPP ancillary retrievers.

iv. Transfer all the files in the download directory into the $HOME/drl/data/pub/CompressedArchivedAncillary directory of the IPOPP system.

v. Refer to Step 3: "Ingest Data" in Section 6, "IPOPP Operation" and ingest RDR/PDS files as specified there:

```
$ $HOME/drl/tools/ingest_ipopp.sh
```

The script will try to connect to the DRL ancillary archive server, fail to do so, print a message like this:

```
No internet connection detected - assuming no-internet mode
```

and use only the $HOME/drl/data/pub/CompressedArchivedAncillary directory as a source for new ancillary files. If required ancillary files are missing, the script will print an error message and abort. For example :

```
 Found RNSCA-RVIRS_npp_d20110422_t1456080_e1457333_b00001_c20120422161344756000_all-
_dev.h5 ...
   Overpass Date:2011-04-22
   Overpass Time Extent: 14:56:08 - 14:57:33
NO ARCHIVED ANCILLARIES for 2011-04-22!
ERROR: Archived Ancillary Download Failed
```

Terminating IPOPP Ingest

To correct the error, go back to step (iii) above and retrieve the missing archived ancillary files, then try steps (iv) and (v) again. The previously transferred files will still be available on the IPOPP machine.

NOTES:

1. When IPOPP is running on a machine without an Internet connection, its ancillary retrievers will fail, and the failures will be reported to the SLS database (refer to Appendix F, “IPOPP Monitoring”). These errors are harmless and will not affect IPOPP’s processing capabilities.
2. When installing SPAs or patches on an IPOPP running on a machine without an Internet connection, error messages will be printed as the installer tries to update IPOPP’s configuration files:

   Retrieval of Dashboard configuration file failed - check your network connection
   Retrieval of ancillary retriever list failed - check your network connection
   Retrieval of reprocessing retriever list failed - check your network connection

   These errors are harmless, as the configuration files in question will be retrieved by the retrieve_cumulative_ancillaries.sh script, and updated by the ingest_ipopp.sh script.

.

Appendix J
IPOPP Command Line Operation

IPOPP operations can be controlled via the command line. This is useful for automating the running of IPOPP for data processing without GUI access, and for remote control and monitoring of IPOPP.

IPOPP Installation

IPOPP installation is performed from the command line (refer to Section 5, "IPOPP Installation" for detailed procedures).

Install IPOPP (default installation):	$ ./install_ipopp.sh
Install IPOPP (use /raid for storage):	$ ./install_ipopp.sh -datadir /raid

NOTE: Installation using the command ./install_ipopp.sh -datadir /raid will result in a directory structure that is different from the directory structure of the default installation. Refer to Appendix K, "IPOPP Directory Structure."

IPOPP Operation

Start Services	$HOME/drl/tools/services.sh start
Stop Services	$HOME/drl/tools/services.sh stop
Ingest Data:	$HOME/drl/tools/ingest_ipopp.sh
Check IPOPP Services	$HOME/drl/tools/check_ipopp_services.sh
Reset IPOPP	$HOME/drl/tools/reset_ipopp.sh
Synchronize database with file system	$HOME/drl/tools/sync_ipopp.sh

$HOME/drl/tools/services.sh start
Use this command to start IPOPP services. To run IPOPP when a machine starts up, it is sufficient to put this command in an appropriate system startup script file.

$HOME/drl/tools/services.sh stop
Use this command to stop IPOPP services. To shut down IPOPP cleanly as a machine is being shut down, it is sufficient to put this command in an appropriate system shutdown script file.

$HOME/drl/tools/ingest_ipopp.sh
Use this command to ingest data into IPOPP for processing. Refer to Section 6, "IPOPP Operation: Step 3, Ingest Data," for details.

$HOME/drl/tools/check_ipopp_services.sh
Use this command to view IPOPP's current status. Example output:

Checking status of IPOPP enabled services...

NSLS Server	ON
IS Retriever	ON
IS Deleter	ON
DSM ValidateDB (Database Checker)	ON
DSM PDS Mover	ON
DSM NPP RDR Mover	ON
VIIRS_C-SDR	ON
VIIRS_C-SDR-copy1	ON
CVIIRS	ON

```
vcviirs-geotiff                    ON
VIIRS-AF                           ON
vcviirsfire-geotiff                ON
VFIRE375                           ON
vfire375-geotiff                   ON

done.

Checking for rogue processes...
Everything looks OK
done.

IPOPP services check complete.
```

$HOME/drl/tools/reset_ipopp.sh
Use this command to reset IPOPP. An IPOPP reset can be used to recover from unexpected IPOPP errors. A reset will stop the IPOPP Services, clear product registration from the IPOPP database, and remove ancillary and data product files.

NOTE: An IPOPP reset deletes all data products. Copy data products that you wish to retain to another location before you reset IPOPP**.**

$HOME/drl/tools/sync_ipopp.sh
IPOPP autonomously manages its file system. User deletion of files from the IPOPP file system is not necessary or recommended. In the event that files are deleted from the file system, use this command to synchronize the database to the file system before continuing processing.

IPOPP Monitoring

Command line queries for IPOPP monitoring are contained in Appendix F, “IPOPP Monitoring.”

Appendix K
IPOPP Directory Structure

Figure K-1 depicts the directory structure for the IPOPP default installation, achieved by using the command ./install_ipopp.sh. Refer to Section 5, “IPOPP Installation,” for complete installation procedures.

Figure K-2 depicts the directory structure for an IPOPP installation using /raid for storage, achieved by using the command ./install_ipopp.sh -datadir /raid.

```
$HOME/
        drl/
            data/
                dsm/
                    ingest/  [Landing Zone for data ingest]
                    nisfes_data/
                pub/
            dsm/
            file2file/
            geo/
            interp/
            is/
            ncs/
            nsls/
            properties/
            reprocessing/
            site.properties
            SPA/
            standalone/
            SUA Open Source IPOPP GSC-15570-1.pdf
            tools/
            VERSIONLOG
            VIIRS-RDR-granule_dispatcher/
```

Figure K-1. Directory Structure for Default Installation

```
$HOME/
        drl/
            dsm/
            file2file/
            geo/
            interp/
            is/
            ncs/
            nsls/
            properties/
            reprocessing/
            site.properties
            SPA/
            standalone/
            SUA Open Source IPOPP GSC-15570-1.pdf
            tools/
            VERSIONLOG
            VIIRS-RDR-granule_dispatcher/
/raid/
     dsm/
          ingest/  [Landing Zone for data ingest]
          nisfes_data/
     pub/
```

Figure K-2. Directory Structure for Installation Using /raid for Storage

Appendix L
Parallel Processing

To speed processing of large amounts of VIIRS data, IPOPP can run multiple instances of the VIIRS_C-SDR and JPSS-1_VIIRS_C-SDR services concurrently. This is useful when data files arrive continuously, or are being presented for reprocessing in large batches.

To enable parallel processing, use the tools/parallel_spa.sh script, for example:

```
$ $HOME/drl/tools/parallel_spa.sh 3
Changing parallel mode to 3
SPA services will be stopped
Are your SURE you want to proceed (YES|NO) ?
YES
Stopping all SPA services...
Stopping NCS Station - l0l1aqua...

        … OUTPUT OMITTED …

Done
```

With a numeric <count> argument, the script:

- asks for verification – type YES to continue;
- stops all SPA services;
- creates that many additional instances of the VIIRS_C-SDR and JPSS-1_VIIRS_C-SDR services.

For example, a <count> of 3 creates 3 additional instances of the selected SPA services, for a total of 4. A <count> of 0 disables parallel processing.

IPOPP SPA services must now be restarted, and parallel processing will be enabled.

The optimal value of the <count> argument depends on the resources (CPU, RAM) available on your system and your processing needs. We recommend setting this value no higher than 3.

When parallel processing is enabled, parallel SPA services will have multiple entries in $HOME/drl/ncs/stations. The additional parallel services will have names ending in '_copy<X>', where <X> is a number between 1 and the parallel count. Be aware of this when diagnosing SPA service errors. Refer to Appendix H Diagnosing and Recovering from IPOPP Operational Errors."

With the -status flag, the tools/parallel_spa.sh script prints the number of parallel services currently enabled. A parallel count of 0 is the default (meaning no parallel services, or standard IPOPP configuration). For example:

```
$ cd $HOME/drl
$ ./tools/parallel_spa.sh -status
Current parallel count is 0
```